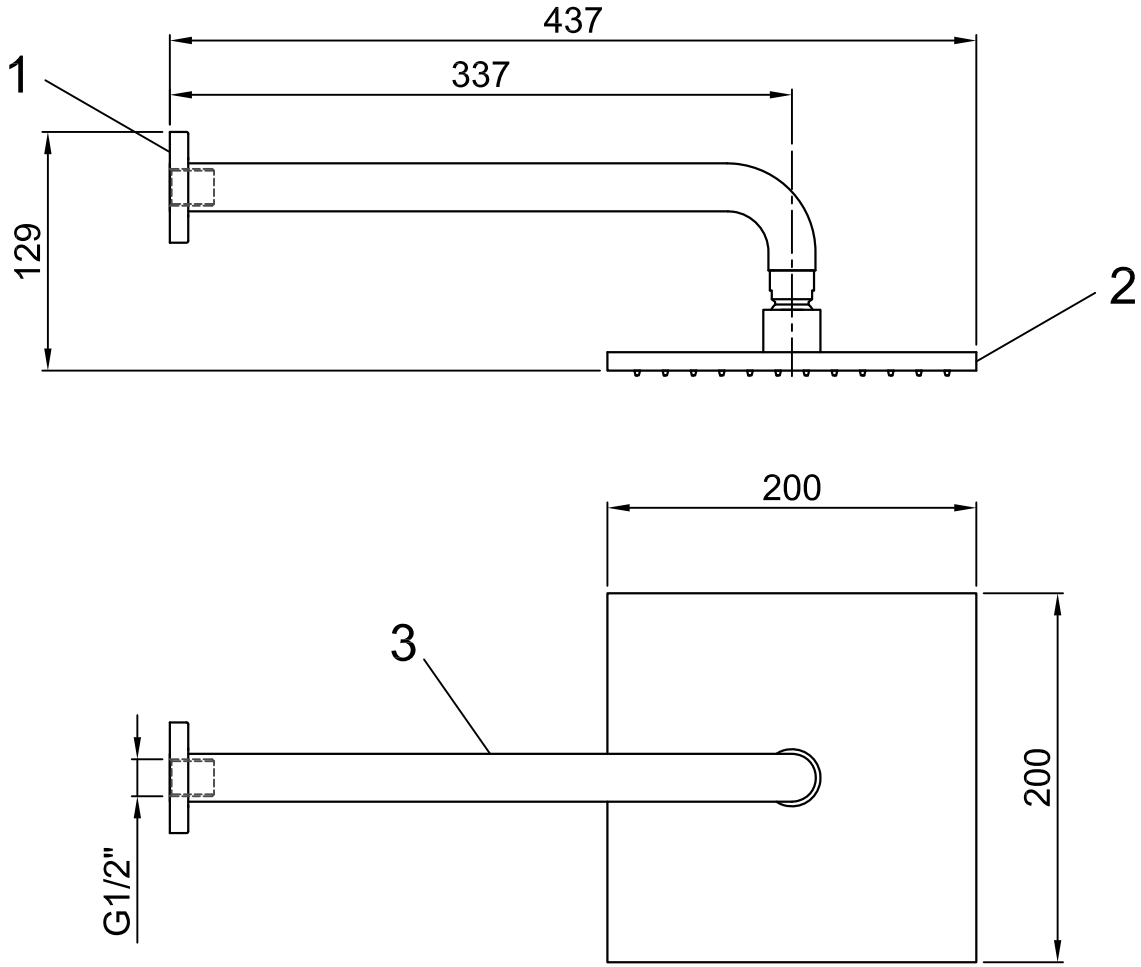

Parts List

Item	Code	Discription	QTY
1	WPB03	Brass Press Round Wall Plate	1
2	SAS01	Stainless Steel Round Arm	1
3	RSA07	ABS Rain Shower - Square Chrome	1

abey

Product Code
RAA04K

Date
10 Nov 2010

Address
Abey Australia Pty Ltd
57-81 Abey Road, Melton, VIC 3337
www.abey.com.au